Town of Dumfries
Council Meeting

Meeting Date: April16, 2013

Agenda Item# V - C

AGENDA ITEM FORM

TYPE OF AGENDA ITEM:

- ☐ CONSENT AGENDA
- ☐ PRESENTATION
- ☐ ACTION ITEM
- ☐ TOWN MANAGER & STAFF COMMENTS
- ☐ PUBLIC HEARING
  - ☐ Duly Advertised

PURPOSE OF ITEM:

- ☑ INFORMATION ONLY
- ☐ DISCUSSION ONLY
- ☐ DISCUSSION AND/OR DECISION
  - ☐Introduction ☐ Resolution
  - ☐ Ordinance ☐ Grant/MOU
  - ☐By Motion ☐ Bylaws
  - ☐Certificate

PRESENTER: Gregory Tkac **PRESENTER TITLE:** Director of Public Works

AGENDA ITEM:

Proposed amendment to the Transportation section of the Town's Comprehensive Plan

BACKGROUND / SUMMARY:

Proposed amendment to the Transportation section of the Town's Comprehensive Plan is intended to illuminate references to the Harbor Station development. This change also shows a proposed signalized intersection at Tripoli Boulevard and an extension of Tripoli Boulevard to the northeast to connect to the proposed Potomac Shores Parkway. This very minor amendment is to accommodate the future Potomac Shores development only. The proposed changes are highlighted in yellow. This amendment is expected to be advertised and go to a joint planning commission / council public hearing in May.

ATTACHMENTS:

The Transportation Section of the Town's Comprehensive Plan with modifications to allow for the Potomac Shores development highlighted in yellow.

REQUESTED ACTION:

FOR MORE INFORMATION, CONTACT: Name: Greg Tkac

Phone#: 703 221-3400 E-mail: gtkac@dumfriesva.gov

FOR USE DURING MEETING **VOTE:** ☐ PASSED ☐ NOT PASSED

Y	N		Y	N		Y	N	
☐	☐	Brewer	☐	☐	Foreman	☐	☐	Forrester
☐	☐	Reynolds	☐	☐	Toney	☐	☐	Washington
☐	☐	Wood						

Form updated 11-12 by DMH

TRANSPORTATION

GOAL

Provide and maintain an integrated, sustainable, multi-modal transportation system that is accessible, safe, efficient, and environmentally responsible, while complementing the Town's land use policies.

BACKGROUND

The Dumfries transportation system is comprised of various elements including principal arterial highways, a local road system consisting of urban streets, a nearby interstate, sidewalks, bicycle facilities, mass transit and parking. All of these elements require constant maintenance, upgrades, replacement and additions in order to best serve the community. Each of these elements is also complementary to the others and serves the community as a network. Increasing usage on one element will likely cause a decreased impact on another. A well-functioning transportation network is essential to provide for the efficient movement of people, providing a good quality of life and economic development opportunities.

To promote the best quality of life in Dumfries, the Town is committed to providing viable transportation options for the motorized vehicle, with alternative transportation facilities seamlessly integrated into the road network. The successful creation of a cohesive transportation plan requires cooperation from both Prince William County and the Virginia Department of Transportation (VDOT).

This transportation plan provides the basic framework to meet the existing and future needs of the Town of Dumfries. Additionally, it should be used as a guide for cooperation with Prince William County, the Potomac and Rappahannock Transportation Commission (PRTC), and regional and state agencies.

ROADWAYS

General Road System: The Town road network consists of multiple street classification types that correspond to traffic volumes and design criteria. VDOT classifies streets as arterial, collector or local. Arterials are designed for consistently heavy volumes of traffic. While these arterials comprise a smaller percentage of the street network, they support the heaviest traffic volumes identified as vehicle miles traveled. Interstate 95 and Routes 1 (Fraley Boulevard/Main Street) and 234 (Dumfries Road) are the arterials in or near the Town.

Interstate 95 (I-95) lies along the Town's western corporate limits and is an important inter- and intra-regional transportation facility for the Washington Metropolitan Area, as well as the entire east coast. Dumfries can be accessed from I-95 by Exits 150 and 152. Route 1 is a primary arterial that parallels Interstate 95 and is a major commuter route for the region, often serving as an alternate route as well as the principle diversion route for the interstate during incidents that either close or restrict travel. Route 1 is a bifurcated facility throughout most of town. Fraley

Boulevard is a one way, two-lane roadway that serves as Route 1 northbound, whereas Main Street has two lanes dedicated to Route 1 southbound. Both Fraley Boulevard and Main Street converge just under a half mile south of the northern corporate limits and becomes a four-lane facility.

The Route 1 Fraley Boulevard Widening Project is the largest and most regionally significant transportation project facing the Town. VDOT has conducted a corridor and transit study which resulted in an adopted typical section. This typical section includes a six lane roadway, a planned multi-use trail on the northbound side of the facility, and a sidewalk on the southbound side of the facility. This general design concept needs to be updated and advanced to reflect the community's current priorities and place the Town in a position for funding opportunities. A primary community priority includes safe pedestrian crossings at key intersections, such as a walkway under the bridge at Quantico Creek that connects the Williamstown community to Garrison Park. Other priorities include limiting the number of vehicular access points to Fraley Boulevard and planning for frontage roads that would run parallel to the Route 1 corridor and serve local land uses on either side of the Boulevard. Another concept would be to incorporate a dedicated transit lane within the designated right-of-way.

Route 234 is a primary arterial with its eastern termini just northwest of the town corporate limits. The highway known as Dumfries Road serves many residential communities to areas north and west of the town and provides a direct connection to the Cities of Manassas and Manassas Park, and Interstate 66.

Collector streets are intended to support moderate to heavy levels of traffic, routing traffic from - and sometimes through - residential areas, employment centers, and shopping areas. Possum Point Road is a collector road that serves the Possum Point Power Plant Station, owned and operated by Dominion Power, and is the only access point to the power station. The power plant is located on the confluence of Quantico Creek and the Potomac River. This two-lane road also serves residential communities and single family residences. Other important collectors that serve traffic throughout the Town include Graham Park Road, which extends from Route 1 eastward serving residential communities, as well as the Prince William County Park Authority's Graham Park Pool and Graham Park Middle School, both of which are located directly adjacent to the Town. Mine Road is one of the few roads that provide access across Interstate 95. After exiting the town limits on the western side of Interstate 95, Mine Road intersects Van Buren Road, which provides an alternate link to Route 234. This is the only road that provides a connection beneath I-95 from the town to the western side of I-95.

Local streets are assigned a speed limit of 25 miles per hour unless otherwise posted. The Town has a variety of differing widths for local streets. In the older, colonial-based portion of town, streets are narrow and sometimes have curb and gutter, and on other occasions have a more rural ditch-section street. Many of the subdivisions constructed beginning in the 1960s, such as Prince William Estates, have a traditional suburban street network with curb and gutter streets with cul-de-sacs. Private streets and parking lots that provide access to many multi-family areas, including the Williamstown Community, rely on few local streets in the publicly maintained network.

Accepted public streets, in order to receive maintenance funds, must meet Town and VDOT design criteria. Unaccepted, or private, streets receive restricted Town services as they are not maintained by the Town for typical maintenance needs, such as repaving, storm drain maintenance and snow removal. The Town also has a number of "paper" streets, which are streets that are platted but unconstructed. Many of the paper streets are not recorded by plat and deed, and have variable widths.

Street Maintenance & Construction: In the Commonwealth of Virginia, incorporated localities with a population of 3,500 or greater are considered "urban" and are responsible for maintaining their own streets. Even though the Town maintains its own street network, VDOT retains responsibility for Route 1 through the Town, which is mostly a bifurcated facility. Fraley Boulevard is a one way two-lane roadway that serves as Route 1 northbound, whereas Main Street has two dedicated lanes that serve as Route 1 southbound.

The Commonwealth provides two primary transportation funding sources for the Town - the Highway Maintenance Fund for urban localities based on a dollar formula per lane mile, and funding for new construction projects through the Urban Construction Program (UCP). The UCP is allocated through a complicated per capita formula system. The Commonwealth's UCP has undergone significant decreases due to the economic climate at the state level. The Town competes for state and federal funding with other localities in the Northern Virginia District through VDOT's Six Year Improvement Program (SYIP). Like most urban communities around the Commonwealth, the Town's funding for its UCP has decreased from $127,000 in FY09 to $0 in FY12.[1] Due to funding shortages at the state level, it is anticipated that the UCP will remain unstable and unreliable, leaving localities to fund local priorities either through innovative means or local tax revenues.

From a programmatic standpoint, the Town of Dumfries is one of thirteen urban community's statewide belonging to VDOT's Urban Construction Initiative (UCI) Program where urban cities and towns elect to manage their own urban construction program. The Program is not directly linked to the funding mentioned above, however, UCI communities traditionally have an increased awareness of VDOT policy and pragmatics. Involvement in the UCI allows a direct voice at the table with VDOT to craft policy reform and streamlining. Historically, cities and towns identify construction projects in the SYIP which VDOT then designs, constructs at a locality's behest and then turns over perpetual maintenance responsibilities to the locality. Involvement in the program streamlines VDOT oversight by allowing project decisions to reside at the local level and assume significant responsibility, acting on the behalf of VDOT, to ensure that all state and federal guidelines are followed and met.

Traffic Circulation and Safety: The Town of Dumfries is effectively divided throughout the community with major north-south arterial streets – I-95, Main Street, and Fraley Boulevard – along with a number of other significantly busy roadways – Graham Park Road, Curtis Drive, Route 234, and others. The volumes experienced on these streets is significant due to the amount of regional commuting experienced by the Town's residents and others who are commuting through the community.

[1] From VDOT's *Six Year Program*.

Periodically analyzing the Town's traffic volumes, patterns, intersections, and accident locations (and types) will result in better planning and design of future transportation infrastructure throughout the locality. Having or developing the most current information is vitally important to ensure the best utilization of the Town's extremely limited transportation funds.

Regional Access: Dumfries is adjacent to Interstate 95 (I-95), which serves as the major north-south transportation corridor along the East Coast from Maine to Florida. This interstate serves as a primary commuting corridor between Dumfries and Washington, D.C. and in 2009 carried an average of 157,000[2] vehicles per day.

Route 1 is an important regional and intra-regional transportation route. The original major north-south route replaced by I-95 in the 1960s, Route 1 serves as an alternative to the often congested I-95, particularly during commuting times and when traffic incidents close portions of the interstate. The Route 1 corridor has many reminders of a once important inter-regional transportation route that now serves a myriad of commercial and industrial uses within the Town and supports approximately 28,000 vehicles per day.

Route 234, or Dumfries Road, has been rooted in the community for the better part of a century since its original addition to the state transportation system in the 1920s. Dumfries Road serves approximately 32,000 vehicles per day and is a major connector to Manassas, I-66, and other points west. Even though not located within the Town's limits, it is an important transportation facility that provides regional connections (e.g., Exit 152 next to the Town's northwest boundary). A Park & Ride commuter parking lot is located at its intersection with Route 1.

Potomac Shores

Formerly known as "Harbor Station" the 1,980 acre tract is a mixed-use development that includes traditional mixed-use, residential, commercial and recreational uses, which also includes a Virginia Railway Express (VRE) facility within the development. The original Harbor Station development was sold in August 2011 after previous ownership went into bank receivership. The site includes two and a half miles of river frontage along the Potomac River and zoning allows for 3.7 million square feet of commercial development as well as 3,987 residential units. The development has similar impacts to nearby transportation networks, however, the renewed interest in the development requires substantial improvements to the roadway network which will serve the complex, including the extension of Route 234 to the east side of Route 1 and a connector road to extend Tripoli Boulevard.

[2] From VDOT's *Traffic Data by Jurisdiction*

Significant County Roadway Projects:

Jefferson Davis Highway/Route 1 (Fairfax County to Stafford County –currently excluding the Town of Dumfries) – Jefferson Davis Highway functions as a multi-modal principal arterial carrying both intra and inter-county traffic. As I-95 gets more congested, traffic volumes will continue to increase on Route 1 and there will be a need for grade-separated interchanges at Route 234, Dale Boulevard, and Route 123. The recommended right-of-way corresponds to the typical sections included in the adopted Route 1 Location Study. The 140' right-of-way is being proposed from Fairfax County to the Joplin/Fuller intersection (excluding the area associated with the designed Route 1/Route 123 interchange) and the 150' right-of-way is being proposed for the section between the Joplin Road/Fuller Road intersection and Stafford County. This significant widening on either end of the Town will effectively create a choke point within the Town where the road way will be narrow and bifurcated within the Town limits. Every effort should be made to expedite the Town's proposed Route 1 (Fraley Boulevard) transportation project.

~~Harbor Station~~ Potomac Shores Parkway (Jefferson Davis Highway/Route 1 to Cherry Hill Road) – This roadway will extend existing Dumfries Road (Route 234) east of Route 1 in order to provide access to the Cherry Hill area of the County, including the proposed Cherry Hill Virginia Railway Express (VRE) station. The proposed roadway will be a controlled access facility, and as such curb cuts and median breaks are discouraged. The recommended right-of-way corresponds with the right-of-way approved as a part of the Harbor Station development proposal. The Parkway is planned to extend as far east as the Marina Access Road. This project will extend Route 234 through the northeast quadrant of Dumfries bisecting several parcels on the eastern side of the road. The ultimate design should address access from Harbor Station Drive to these frontage parcels without undermining the overall functionality of the parkway.

~~Harbor Station~~ Potomac Shores Parkway (Cherry Hill Road to River Heritage Boulevard / Marina Access Road) – This section of Harbor Station Parkway connects the marina area of Cherry Hill to the town center area of the ~~Harbor Station~~ Potomac Shores development. A reduced and modified minor arterial section was allowed with the Harbor Station development because traffic volumes did not generate the need for a principal arterial section.

Bradys Hill Road (Jefferson Davis Highway/Route 1 to Kerill Road) – This road provides access from Route 1 to the eastern areas of Dumfries and Triangle. As generally outlined in the Potomac Communities Plan, Bradys Hill Road is expected to be extended eastward from its existing terminus to provide a third east-west collector street in the area (in addition to Graham Park Road and Fuller Heights Road). The proposed alignment would generally follow the northern edge of the proposed Fuller Heights Park and would terminate in the vicinity of Kerill Road.

Van Buren Road – South (Dumfries Road/Route 234 to Mine Road) – Paralleling I-95, this roadway provides access to and from the Town of Dumfries. This road will allow an alternate route and can remove local traffic from I-95.

ALTERNATIVE TRANSPORTATION FACILITIES

In 2011, there are a number of facilities that comprise a disjointed transportation system for bicyclists and pedestrians. The need to expand and connect the existing sidewalk and bikeway system is essential to effectively provide all the transportation needs of the community. Pedestrian, bicycle and greenway facilities include sidewalks, bicycle lanes, and off-road trails such as the East Coast Greenway and the Potomac Heritage Trail. The importance of the connectivity of these alternative transportation facilities cannot be overstated. A cohesive, multi-modal alternative transportation system is an integral component to the Town's transportation plan.

Consistent with this plan, and in communities across the country, is the "Complete Streets" concept. States, cities and towns are asking their planners and engineers to build road networks that are safer, more livable, and welcoming to everyone. Instituting a "Complete Streets" policy ensures that transportation planners and engineers consistently design and operate the entire roadway with all users in mind including bicyclists, public transportation, and pedestrians of all ages and abilities, as well as motorists.

Sidewalks: Sidewalks complement the other components of the alternative transportation network by increasing the safety of pedestrians and offering an alternate and practical mode of transportation, thus encouraging people to walk to their destinations. Sidewalks serve a variety of functions in the community. They separate pedestrian and vehicular traffic, thereby facilitating better traffic flow, affording enhanced safety to pedestrians; they allow for circulation within residential areas and provide pedestrian access to schools, recreational areas, commercial areas, and the downtown. Sidewalks also provide safer areas for disabled citizens to travel and for children to travel to play areas and parks. Many residential communities lack pedestrian facilities.

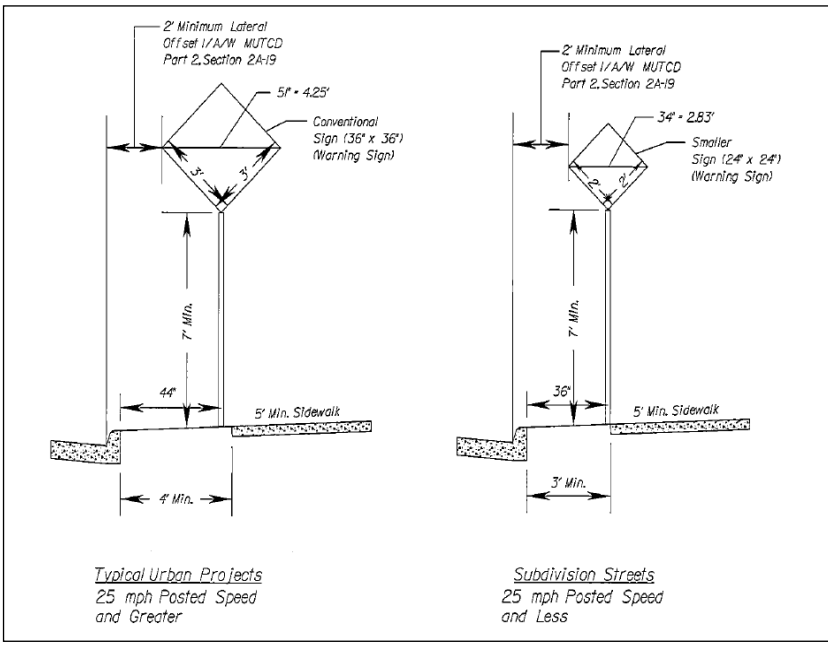

All design features of sidewalks should conform to the most recent version of the Road Design Manual and the latest ADA Guidelines.

Sidewalk Typical Section

Sidewalk planning consists of the prioritization of projects in the Capital Improvements Program and modifications to the Subdivision and Zoning Ordinances. There are two main methods of financing sidewalks in Town. The first is the inclusion of sidewalks in new developments, where the developer incurs all of the costs. This is most effectively achieved through a clear and robust Subdivision and Zoning Ordinance or through proffers achieved in a rezoning process. It should be noted that these tools are obviously contingent on the development or redevelopment process, thus limiting their effectiveness in that context. The second method of financing sidewalk projects is through Town installation, whereby all of the costs are borne by the Town. The primary limitations of this method are both political and financial. The town would have to commit to a budgeted amount of funds to achieve a certain number of sidewalk projects per year.

Funding for these projects can be from a variety of sources such as the Capital Improvements Program, the VDOT Revenue Sharing programs, or other state and federal grant opportunities. These funds have been increasingly scarce and the competition in grant programs has responded accordingly. The Town has made strong efforts to retrofit streets through Congestion Mitigation for Air Quality (CMAQ) funds in recent years. The CMAQ program is a federally funded program first established in 1990 and is available through VDOT. Through the program, funding is set aside for alternative transportation opportunities for communities that are located in areas where air quality standards do not meet federal ambient air quality requirements.

Bicycle lanes: It is recognized that many citizens enjoy riding bicycles, walking, or jogging on multi-purpose trails that are independent of roads and automobile traffic. It is also recognized that many citizens enjoy riding bicycles on existing roads, particularly ones designated as bicycle routes or with bike lanes that are separate from vehicular traffic lanes. Bicycle lanes are particularly desired as part of future improvements to Route 1, Main Street, Graham Park Road, and Old Triangle Road.

The Town's focus is to develop a comprehensive bicycle system that provides for access between the off-road and on-road paths with smooth transitions. The planning and design of new transportation routes that include sidewalks, bike routes and lanes, and off-road trails in addition to the roadway are essential to the success of a multi-modal alternative transportation system. A primary challenge to achieving such an integrated system is recognizing the significant topographical changes and main arterial road barriers within the Town.

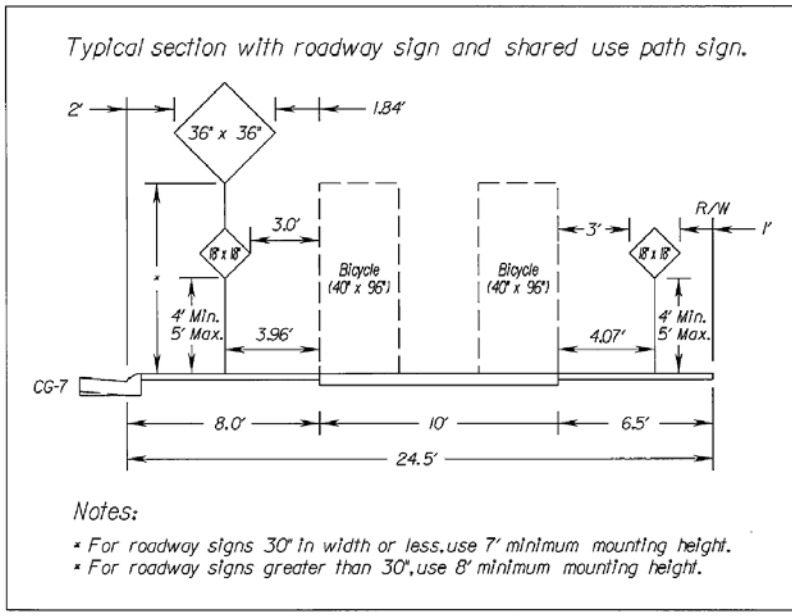

All design features of multi-use paths should conform to the most recent version of the Road Design Manual and the latest ADA Guidelines.

Multi-use Trail Typical Section

Greenway trails: Greenways are linear stretches of open space that include recreational, cultural, and natural areas such as parks, trails, and other "green" spaces. Greenways are part of a community's green infrastructure, providing natural buffer areas to improve water, soil and air quality; serving as wildlife habitat and corridors; reducing the impacts of flooding; and adding aesthetic and viewshed protection. Greenways typically follow natural or man-made features such as streams, railways, or roads and are used for transportation, recreation, education, and environmental protection.

Greenways can benefit the Town of Dumfries in many ways and should be considered an essential community feature. Greenways promote economic development and tourism and increase the beauty of neighborhoods, as well as the value of surrounding properties. These corridors enhance the social and psychological well-being of citizens by providing them with enjoyable activities and settings in which to spend their leisure time. Greenways provide areas for hiking, biking, and picnicking and serve as automobile-free pathways connecting areas of interest. Conservation benefits are also derived from the preservation of greenway corridors through maintaining the integrity of scenic vistas and watersheds, protecting water quality in streams and underground aquifers, and preserving natural habitats and wildlife.

Greenways link neighborhoods, schools, parks, businesses, and people along multi-use trails for walkers and cyclists on a recreational ride or for a daily commute. A comprehensive greenway trail system should be planned through the Town to be a valued component in Dumfries' alternative transportation system. The development and use of the greenway system needs to be an outgrowth of community interest focused on the conservation of natural resources, exercise and outdoor recreation, and a viable alternative to motorized transportation. Better utilization of the Town's existing rights-of-way, and paper streets could expedite the creation of such an integrated system of paths throughout town. Prioritized connections are indicated in either the Town's adopted Comprehensive Plan or the Capital Improvements Plan (CIP). The Town's prioritized Fairfax Trail connection will assist in providing alternative connections between the Weems-Botts Museum and Williams Ordinary on Main Street.

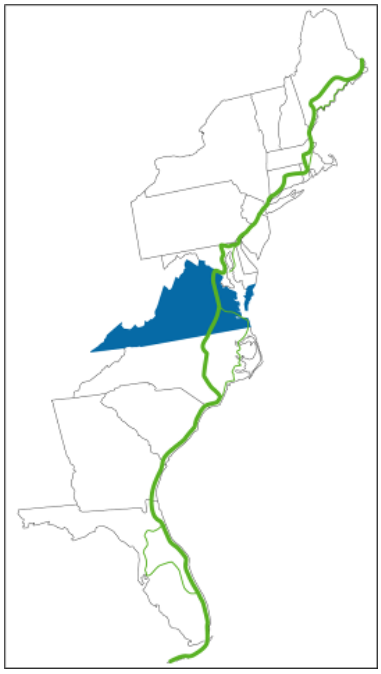

East Coast Greenway

Two notable greenways in the area are the East Coast Greenway and the Potomac Heritage Trail. The East Coast Greenway (ECG) is a developing trail system, spanning nearly 3,000 miles stretching from Canada to Key West, linking the major cities of the eastern seaboard. The ECG enters Virginia along the Mount Vernon Trail, which follows the Potomac River and George Washington Parkway south to Mt. Vernon. From Mt. Vernon, the ECG continues on road to Fredericksburg along the route of the Potomac Heritage Trail. From Fredericksburg, the ECG continues south to Richmond, where the Greenway divides into two routes: the spine route, which continues south to North Carolina's Piedmont region, and the alternate Historic Coastal Route, which heads southeast through Jamestown and Williamsburg before aiming south toward Wilmington, N.C.

The Potomac Heritage Trail is a 800-mile trail network, which begins outside of Pittsburgh, is supported through the National Park Service in partnership with many other local and regional trail facilities. Locally, the trail link is located within the National Park Services' Prince William Forest Park, which comprises 15,000 acres and is located on the western side of Interstate 95 southwest of the Town's corporate limits. There are 37 miles of hiking trails and 21 miles of biking trails within the park, but there is currently no direct access to the park from the Town.

Connectivity: Providing transportation choices for Town residents that connect residential, commercial, and professional destinations will improve the quality of life for residents, but also will assist in reducing motorized vehicle congestion. Efforts must be made to implement a truly multi-modal approach that ties pedestrian, bicycle, transit and parking facilities and places them on appropriate alignments that will be accessible and convenient to users. The challenge of the Town's topography and the barriers that arterial roads (e.g., Route 1 and Main Street) create must be addressed in creative and economically efficient ways.

The proximity of Dominion's Possum Point Power Station, located on Quantico Creek, results in substantial overhead utility distribution and high transmission lines that travel through the Town. These private rights-of-way are owned by Dominion and are currently heavily under-utilized from a land-use perspective. These types of easements commonly restrict mobility options and separate neighborhood communities. To provide increased connectivity in the most direct routes, the Town desires to utilize these easements to provide both recreational and commuter trail facilities. In turn, these trails would provide better access for Dominion to access their tower structures and overhead lines.

Additionally, the Town has a number of "paper streets", which are streets that have been platted, but remain unbuilt. Paper streets can also be utilized for providing access and land for trail connections, particularly where there may not be sufficient right-of-way for street construction, or where topographic challenges exist that preclude either the Town or private developers from constructing streets to Town or VDOT standards.

Over the past century, there have been occasional encroachments on these paper street rights-of-way, and in some cases buildings are located within the right-of-way. These significant rights-of-way should be effectively utilized by the Town to enhance the connectivity between modes of transportation within the community.

MASS TRANSIT

The Potomac & Rappahannock Transportation Commission (PRTC) is a multi-jurisdictional agency that provides commuter bus service to points north (OmniRide and MetroDirect) and local bus services throughout Prince William County (OmniLink and Cross County Connector). The PRTC also offers OmniMatch, a free ridesharing service. In FY09, PRTC had over 130 buses in its active fleet and carried more than 3.2 million passengers. PRTC has developed a strategic plan to measure service growth needs to improve services to member localities.

The OmniLink bus service provides rides for the Dumfries community starting at the Quantico Terrace Apartments in the southeast area of Town. The route serves neighborhood areas along the Route 1 corridor as far north as Dale City including the Potomac Mills shopping center.

Service runs six days a week Monday through Saturday beginning just after 5 AM and running until 10:30 PM, except for certain holidays throughout the year. There is one Transfer Point located at the PRTC Transit Center on Dale Boulevard which enables further service to the Pentagon, Crystal City, Washington DC, Rosslyn, Tysons and metro stations. The Prince William-Metro Direct which can be accessed at the PRTC Transit Center connects Dumfries with the Franconia-Springfield Metro Station.

Fares to ride vary according to need and ability. The local day pass is good for travel within Prince William County, Manassas and Manassas Park for the day the pass is issued. Children five and under are free up to two (2) children, per paying adult. PRTC does provide service on-demand for uses up to ¾ mile from a standard route when there is time available in the schedule, but riders are assessed a surcharge. On demand stops can be scheduled with up to two hours' notice, but PRTC encourages riders requesting this service to schedule a stop one or two days in advance. The on-demand service has the flexibility to reach dependent riders that are not within walking distance to stops, but mitigates the cost of operating a stand-alone paratransit service.

Rapid Transit: Prince William County conducted a bus rapid transit (BRT) feasibility study to improve services along the Route 1 corridor. The study examined financial implications and improvements to the transportation network, extending also to Intelligent Transportation Systems (ITS) to better serve all transportation users. One significant recommendation is the need for higher land use densities to justify a rapid transit system. This land use pattern should be encouraged, particularly in conjunction with the Fort Belvoir Base Realignment and Closure (BRAC) that will add approximately 21,000 military and civilian employees and their families to the area from Dumfries to Woodbridge. Prince William County has also indicated a need to provide higher quality employment opportunities along with higher residential density to attract higher end retail, making the area a destination, not merely a corridor that people pass through.

Traffic impact analysis anticipates a 45 percent increase in overall volumes by 2030 providing the basis for the widening efforts of Route 1 by VDOT, Prince William County and the Town of Dumfries. Increased travel times will require more resources to meet current and future transit needs for users along the corridor.

The BRT feasibility study recommended that:

- Land use densities and mixed-use densities should be planned that would justify a BRT system
- Higher investments should be made in pedestrian amenities to connect destinations with the transit route stops.

Overall, the study found that by the horizon year of 2030, more frequent transit services will be warranted, but the current projected conditions do not justify the substantial investment in a full BRT system.

Local Transit: In 2011, public transportation offered through the PRTC is the only option for Town residents aside from local taxi services. Due to the size of PRTC which includes Spotsylvania, Stafford, Prince William and Fairfax Counties, local adjustments to routes due to changing social or economic realities are difficult to achieve. Primarily located on the eastern

side of the Town, the Williamstown community relies largely on transit options. In 2000, the Town's average household income was 45 percent below the Northern Virginia average (e.g., Prince William County's average was $94,000 versus the Town's $42,000). Dumfries is home to a significant low income population, estimated at 10-17 percent according to the 2000 Census. Additionally, a significant percentage of Town households have no vehicles. More sensitivity to changes in shopping options, particularly when shopping centers close or relocate, is needed in the provision of transit services since traditionally, timely adjustments to transit routes are rare.

PARKING ACCOMMODATIONS

Adequate parking facilities that are attractively constructed and conveniently located are a significant element of Dumfries' alternative transportation system. Many people commute on a daily basis and should be able to Park and Ride at designated lots or find parking spaces that are connected to the alternative transportation network. Additionally, paramount to redevelopment opportunities in the "downtown core", there is a need for appropriately placed and context sensitive parking facilities to attract mixed-use development opportunities.

The Town has recently encouraged economic development in the downtown core by sharing parking requirements between public and private properties. This enabled the developer to maximize the density on the private property and achieved the Town's goal for much needed parking. As the Town continues to encourage mixed-use development throughout the community, creative and innovative parking facilities, such as permitting private development parking requirements to be provided on public properties, creating a parking district, and parking structures, should be encouraged to ensure that adequate parking is provided to sustain the economic viability of developments. This necessitates that the classic shopping center concept be transformed to avoid excessive and underutilized parking lots that require substantial private maintenance and are incompatible with aesthetic and environmental priorities. While the Town is interested in exploring innovative and flexible parking requirements, it will rely on private development to finance the construction of parking structures and lots. Any cost-sharing that might be considered with the Town would be on a limited, case-by-case basis. Parking provision agreements should not financially obligate the Town to participate in the construction of parking facilities (e.g., deck structures).

The Town requires parking for all uses in accordance with the Zoning Ordinance, but parking can be constructed that is environmentally responsible and has a minimal impact to the aesthetic viewshed (e.g., incentivizing pervious pavement for parking areas). Dumfries is responsible for managing stormwater through its MS-4 Permit so the creation of additional parking facilities, whether structures or surface lots, need to have a minimal impact per those regulations. The Town is interested in incentivizing regional stormwater facilities in partnership with local developers, and consider the inclusion of privately maintained stormwater management facilities in lieu of traditional detention.

Located at the intersection of Routes 234 and Route 1, a commuter lot serves the Dumfries community. This facility supports 843 parking spaces and is usually full by 7 AM on weekday mornings. The parking facility also includes bicycle amenities for bike commuters and is supported by the two regional bus routes: OmniRide South Route 1 and OmniRide Montclair.

OmniRide commuter buses provide service to major commuter lots in both eastern Prince William County and the Manassas area. This parking facility also supports "sluglines." "Slugging" is a term used to define a unique commuting method, which is also known as "Instant Carpooling" or "Casual Carpooling." Commuters will meet at specific locations and pair with cars needing additional passengers to meet the three person, high occupancy vehicle (HOV) requirement to travel in HOV lanes.

*****

Now that the Town's transportation system has been outlined, the next section will focus on the implementation of four main objectives and the recommended policies and strategies for achieving those objectives – Roadways, Alternative Transportation Facilities, Mass Transit, and Parking Accommodations.

IMPLEMENTATION

The success of implementing transportation improvements rests on developing a fiscally constrained short-term plan. The town has limited resources through its own general fund and state funding opportunities. These funds should be leveraged to achieve systematic priorities.

TRANSPORTATION PROJECT PRIORITIES

Projects in the Dumfries Urban Construction Program
1. Route 1 Widening (Fraley Boulevard): design and widen Route 1 northbound from South Corporate Limits to Possum Point Road to accommodate a six lane, median divided facility with a sidewalk on the northbound shoulder and a multi-use path adjacent to the southbound lanes. Includes rebuilding bridge over Quantico Creek. Cost: $40 million
2. Tripoli Boulevard Improvements: install curb & gutter and stormwater conveyance system from Route 1 to western terminus. Cost: $1.8 million
3. Graham Park Road/Fraley Blvd/Main St/Curtis Drive Intersection Reconstruction: reconstruct, widen and improve the intersection to accommodate existing and planned traffic volumes and provide better turning movement accommodations. Cost: $1.2 million
4. Main Street Streetscape: using the existing pavement width, accommodate on-street parking, place overhead utilities underground, improve pedestrian accessibility and incorporate streetscape elements in accordance with the Streetscape Plan. Cost: $5 million
Other Priority Projects
5. Route 234/ U.S. 1 Interchange: identified in SYIP for Prince William County.
6. I-95 HOV and HOT Lanes: extend High-Occupancy Vehicle lanes south of Exit 152, and construct High-Occupancy Toll lanes on Interstate 95 in accordance with VDOT plans. Construct sound walls where warranted along Town Corporate Limits.
7. Connection to Potomac Heritage Trail: in partnership with Prince William County, the National Park Service and VDOT, provide a trail connection directly to the Prince William Forest Park and its trail system.
8. Quantico Creek Greenway: construct a linear greenway following Quantico Creek from western corporate limits to eastern corporate limits.
9. Whiskey Street Extension: extend Whiskey Street to align with Fraley Boulevard at Williamstown Drive.
10. Market Street Extension: extend from the intersection of Mine Road/Main Street southward to the north side of Quantico Creek.
11. Potomac Shores Parkway: construct Potomac Shores Parkway as a four lane arterial with a raised median between Route 1 and the existing Harbor Station Parkway in Prince William County beginning at the Route 1/Route 234 intersection.
12. Tripoli Boulevard Extension: extend Tripoli Boulevard on east side of Route 1 and connect with Potomac Shores Parkway.
All road projects should include bike lanes, trails, sidewalks and other amenities as called for in this plan.

Over the years, there have been other projects identified by the Town that are included in VDOT's Six Year Improvement Program (SYIP). One of these is a debris wall construction along I-95 in the Town. While this project resonates as an important quality of life matter for residents adjacent to I-95, the state has been unable to finance this expensive project and the Town does not have the fiscal resources to finance this project independent of state or federal funding. The Town should request that VDOT consider the inclusion of sound walls adjacent to the Town anytime I-95 is widened or otherwise improved.

Once the Town establishes its short-term transportation priorities, other priorities can be identified beyond a five- or ten-year horizon, but they should be carefully considered in a fiscal context as well.

Additionally, the Virginia State Code requires comprehensive plans to include a map that shall show road improvements and transportation improvements. This map should include the cost estimates of such road and transportation improvements as available from the Virginia Department of Transportation, and take into account the current and future needs of residents in the locality. The current and future needs of the locality's planning district should also be taken into consideration.

Town of Dumfries
Transportation Project Priorities Map

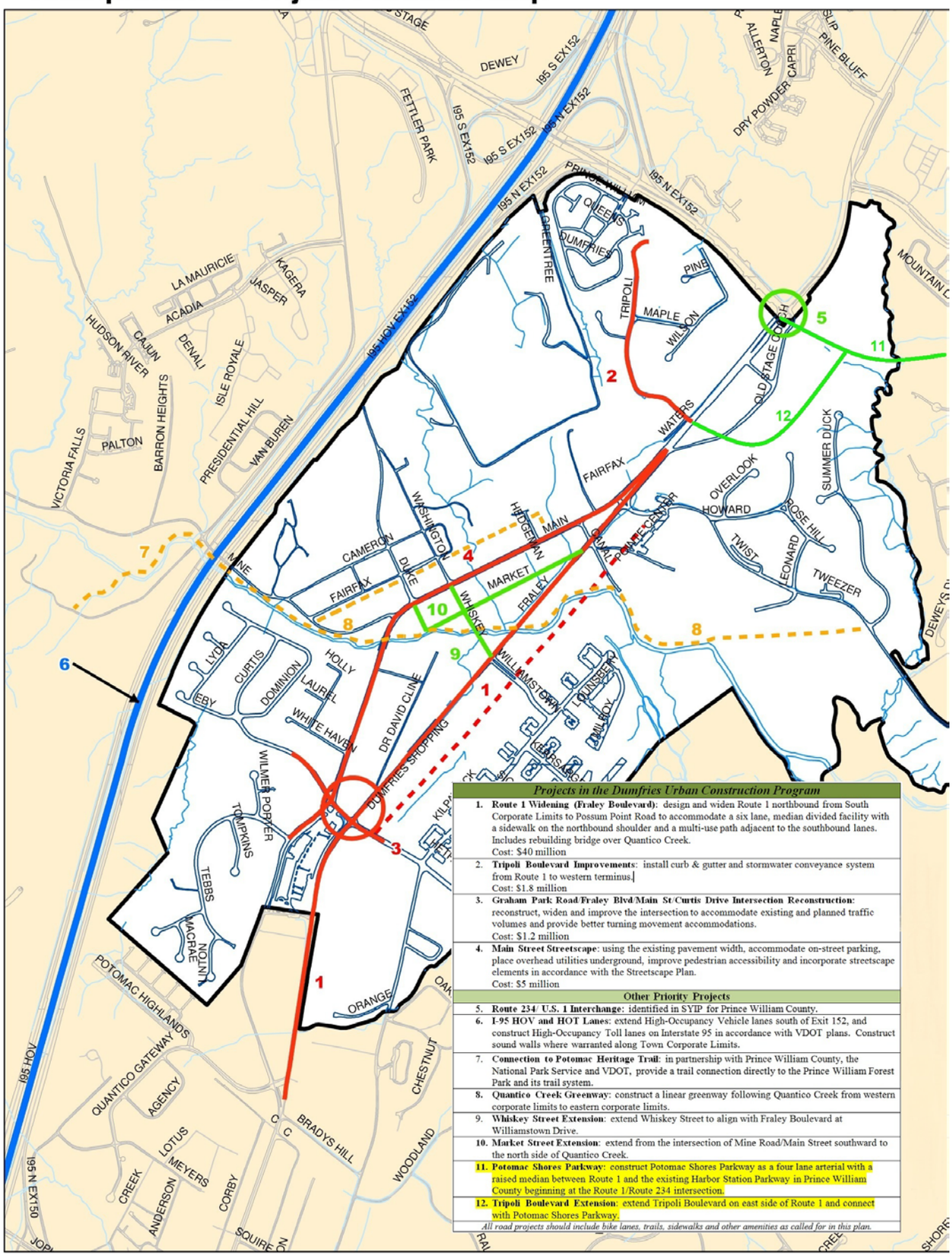

Projects in the Dumfries Urban Construction Program

1. **Route 1 Widening (Fraley Boulevard)**: design and widen Route 1 northbound from South Corporate Limits to Possum Point Road to accommodate a six lane, median divided facility with a sidewalk on the northbound shoulder and a multi-use path adjacent to the southbound lanes. Includes rebuilding bridge over Quantico Creek.
   Cost: $40 million
2. **Tripoli Boulevard Improvements**: install curb & gutter and stormwater conveyance system from Route 1 to western terminus.
   Cost: $1.8 million
3. **Graham Park Road/Fraley Blvd/Main St/Curtis Drive Intersection Reconstruction**: reconstruct, widen and improve the intersection to accommodate existing and planned traffic volumes and provide better turning movement accommodations.
   Cost: $1.2 million
4. **Main Street Streetscape**: using the existing pavement width, accommodate on-street parking, place overhead utilities underground, improve pedestrian accessibility and incorporate streetscape elements in accordance with the Streetscape Plan.
   Cost: $5 million

Other Priority Projects

5. **Route 234/ U.S. 1 Interchange**: identified in SYIP for Prince William County.
6. **I-95 HOV and HOT Lanes**: extend High-Occupancy Vehicle lanes south of Exit 152, and construct High-Occupancy Toll lanes on Interstate 95 in accordance with VDOT plans. Construct sound walls where warranted along Town Corporate Limits.
7. **Connection to Potomac Heritage Trail**: in partnership with Prince William County, the National Park Service and VDOT, provide a trail connection directly to the Prince William Forest Park and its trail system.
8. **Quantico Creek Greenway**: construct a linear greenway following Quantico Creek from western corporate limits to eastern corporate limits.
9. **Whiskey Street Extension**: extend Whiskey Street to align with Fraley Boulevard at Williamstown Drive.
10. **Market Street Extension**: extend from the intersection of Mine Road/Main Street southward to the north side of Quantico Creek.
11. **Potomac Shores Parkway**: construct Potomac Shores Parkway as a four lane arterial with a raised median between Route 1 and the existing Harbor Station Parkway in Prince William County beginning at the Route 1/Route 234 intersection.
12. **Tripoli Boulevard Extension**: extend Tripoli Boulevard on east side of Route 1 and connect with Potomac Shores Parkway.

All road projects should include bike lanes, trails, sidewalks and other amenities as called for in this plan.

LEGEND

- Urban Program Priority Projects
- Urban Program Priority Projects
- Other Priority Projects
- Interstate Priority Projects
- Greenway/Trail Projects

N
W E
S

Miles
0 0.125 0.25 0.5

TRANSPORTATION OBJECTIVES

Town of Dumfries Transportation Implementation Strategy Matrix			
ROADWAYS GOAL: ***Improve and expand the Town's street network so that the arterial primary, collector, and local roads that serve the community are integrated into an effective multi-modal transportation system.***			
Policy 1: Develop and pursue an integrated strategy to fund the Town's transportation priorities.			
Strategy Number	**Strategy**	**Responsible Party**	**Budgetary Impact**
1.1	Coordinate the Town's Capital Improvements Plan (CIP) with the County's Comprehensive Plan and evaluate transportation data (e.g., traffic patterns and traffic counts) on a regular basis so the Town can have an accurate needs assessment for development, regional growth, funding sources, and other identified priorities.		
1.2	Actively seek funding opportunities, including federal/state funds and grants, to achieve transportation goals that minimize general fund impacts.		
1.3	Improve lobbying efforts and increase information sharing by closely collaborating with the Planning District Commission and VDOT District on planned road priorities to maximize the political and financial capital for identified projects.		
1.4	Require residential and commercial development to provide right-of-way for the widening of planned road improvement projects.		
1.5	Adopt a Proffer Policy to account for the external impacts of development on Town services, and better enable the Town to negotiate proffers associated with conditional rezonings that will result in improvements to the Town's transportation system.		

Policy 2: Maintain and manage a transportation network that is safe for all users.			
Strategy Number	**Strategy**	**Responsible Party**	**Budgetary Impact**
2.1	Maintain storm drainage facilities on a regular basis to ensure that roadways are not structurally undermined by flooding or erosion.		
2.2	Coordinate the repaving of streets throughout the Town based on pavement inspection by Town staff or their designees.		
2.3	Coordinate traffic signals to optimize signal timing along roadways with signalized intersections and roadway corridor segments.		
2.4	Limit driveway and commercial access points along major arterials and collectors streets, thus increasing safety and traffic efficiency.		
2.5	Evaluate lane markings and consider adjustments where possible to accommodate traffic efficiency or provide for additional users such as bicycle lanes.		
2.6	Integrate traffic calming concepts into new neighborhood developments and major redevelopments.		

Policy 3: Provide a road network that accommodates multiple modes of transportation.			
Strategy Number	**Strategy**	**Responsible Party**	**Budgetary Impact**
3.1	Plan for all road projects to accommodate multi-modal features for transit, pedestrian and bicycle access.		
3.2	Begin design for widening Fraley Boulevard to be compatible with multi-modal elements consistent with VDOT's typical section south and north of the Town. This will position the Town for future funding, and assist in understanding right-of-way impacts to partner with land-owners and developers to obtain right-of -way or proffers for rezonings.		
3.3	Adopt a downtown streetscape plan that utilizes the existing pavement width to provide on-street parking, landscaping opportunities and a pedestrian-friendly atmosphere to encourage redevelopment on a mixed-use downtown or "town center" nature.		

Policy 4: Actively support all improvements to Interstate 95 that will reduce through traffic in Town.			
Strategy Number	**Strategy**	**Priority**	**Budgetary Impact**
4.1	Promote VDOT and FHWA initiatives to construct additional capacity on I-95, without financially impacting Town residents.		
4.2	Plan and construct additional HOV lanes south of Exit 152.		
4.3	Promote the use of high occupancy vehicle (HOV) lanes, as well as carpooling and vanpooling, through incentives for destinations (commercial, office, other) that accommodate ridesharing programs.		

ALTERNATIVE TRANSPORTATION FACILITIES GOAL: *Develop an integrated, multi-modal pedestrian and bicycle network that enhances the Town's roadway system.*			
Policy 5: Enhance and implement the Town's Multi-modal Plan to create an alternative transportation network.			
Strategy Number	**Strategy**	**Responsible Party**	**Budgetary Impact**
5.1	Construct all sidewalks to a minimum of five feet in width and incorporate a three foot utility strip between curb and sidewalk wherever possible.		
5.2	Finance and construct the Multi-modal Plan's sidewalk priorities.		
5.3	Provide appropriate markings and identifications which will include, but are not limited to, road striping, bicycle lane designations, signage, and way-finding reference points.		
5.4	Using the inventory and existing databases of bus routes within the County, identify bus stop locations that are lacking adequate pedestrian access and prioritize the installation of pedestrian improvements in cooperation with PRTC.		
5.5	Continue to apply for appropriate state, regional, and federal funding assistance in developing a safe and effective pedestrian and bicycle network.		
5.6	Require the inclusion of sidewalks in all development and redevelopment.		

Policy 6: Implement the "Complete Streets" concept within walkable communities and town centers.			
Strategy Number	**Strategy**	**Responsible Party**	**Budgetary Impact**
6.1	Update Town ordinances that encourage "Complete Streets" design.		
6.2	Seek wider sidewalks where necessary to accommodate pedestrian movements in community and commercial centers.		
6.3	Seek non-motorized connections to community and commercial centers, regional destinations, and sites of interest; such as cultural, historic, and park facilities.		
6.4	Implement a Safe Routes to Schools (SR2S) Program to support Prince William County schools within Dumfries in order to provide safe pedestrian facilities for elementary and middle school students.		
6.5	Develop street standards for a project as appropriate to the project and in accordance with Traditional Neighborhood Design standards.		
Policy 7: Identify and preserve the existing rights-of-way throughout the Town that will provide future transportation facilities.			
Strategy Number	**Strategy**	**Responsible Party**	**Budgetary Impact**
7.1	Identify paper streets that are appropriate for future roadway right-of-way.		
7.2	Identify paper streets that have encroachments or are otherwise more appropriate as future alternative transportation routes that will enhance the connectivity of the overall Town transportation system.		

MASS TRANSIT GOAL: *Integrate transit services to link jobs, housing, commerce, and recreation within the Town and immediate area.*			
Policy 8: Enhance the connectivity of inter- and intra-county transit systems.			
Strategy Number	**Strategy**	**Responsible Party**	**Budgetary Impact**
8.1	Promote an efficiently designed bus feeder network to connect commuter rail stations and other transit centers as an integral part of a broader access plan to curtail single occupancy vehicle (SOV) access.		
8.2	Require the provision of transit facilities and services with conditional use permit (CUP) applications and rezonings, as appropriate.		
8.3	Coordinate transit provisions with development and site plan proposals. Add specific transit facilities (e.g., shelters, appropriate lighting, sidewalk access, etc) to development checklists when reviewing plans.		
8.4	Explore feasibility of a locally funded, limited schedule Town shuttle.		
Policy 9: Work with adjacent jurisdictions to develop support for joint alternative transit projects.			
Strategy Number	**Strategy**	**Responsible Party**	**Budgetary Impact**
9.1	Determine what the needs are for mobility impaired populations.		
9.2	Coordinate an efficient and effective intra- and inter-transit system to ensure sufficient bus connections and access to and between community and commercial centers. This requires close cooperation with adjacent jurisdictions, federal, state and regional, transportation agencies such as but not limited to VRE, PRTC, VDOT, WMATA.		
9.3	Work with Prince William County to more effectively lobby state and federal government for additional transit funding streams.		
9.4	Consider the location of mobility impaired populations and their travel needs (i.e., doctor, hospital, shopping, social activities, etc.) when deciding on the placement of bus route locations, and examine ways to provide transportation alternatives to those populations that don't have access to PRTC or VRE services (e.g., taxicabs, local transit service, etc.).		

PARKING ACCOMMODATIONS GOAL: *Integrate adequate parking to sustain economic development in an ecologically and aesthetically attractive manner.*			
Policy 10: Integrate parking facilities into the surrounding environment as seamlessly as possible, and while minimizing the amount of under-utilized impervious pavement.			
Strategy Number	**Strategy**	**Responsible Party**	**Budgetary Impact**
10.1	Develop new parking standards and incorporate them into Town ordinances.		
10.2	All parking lots and structures must be designed and screened to eliminate visual intrusion or incompatibility with the adjacent residential neighborhoods, historic or conservation (from LU chapter)		
10.3	Provide multi-modal access between park and ride lots and surrounding uses.		
10.4	For certain Traditional Neighborhood Development proposals, encourage parking requirements to be met in a variety of ways, including the use of publicly owned parking, thereby allowing more effective use of developable land.		
10.5	Coordinate parking policies with transportation demand management policies and strategies (i.e., the provision for reserved spaces for carpools).		
10.6	Encourage structured parking associated with transit facilities and services, as appropriate, such as with parking districts.		